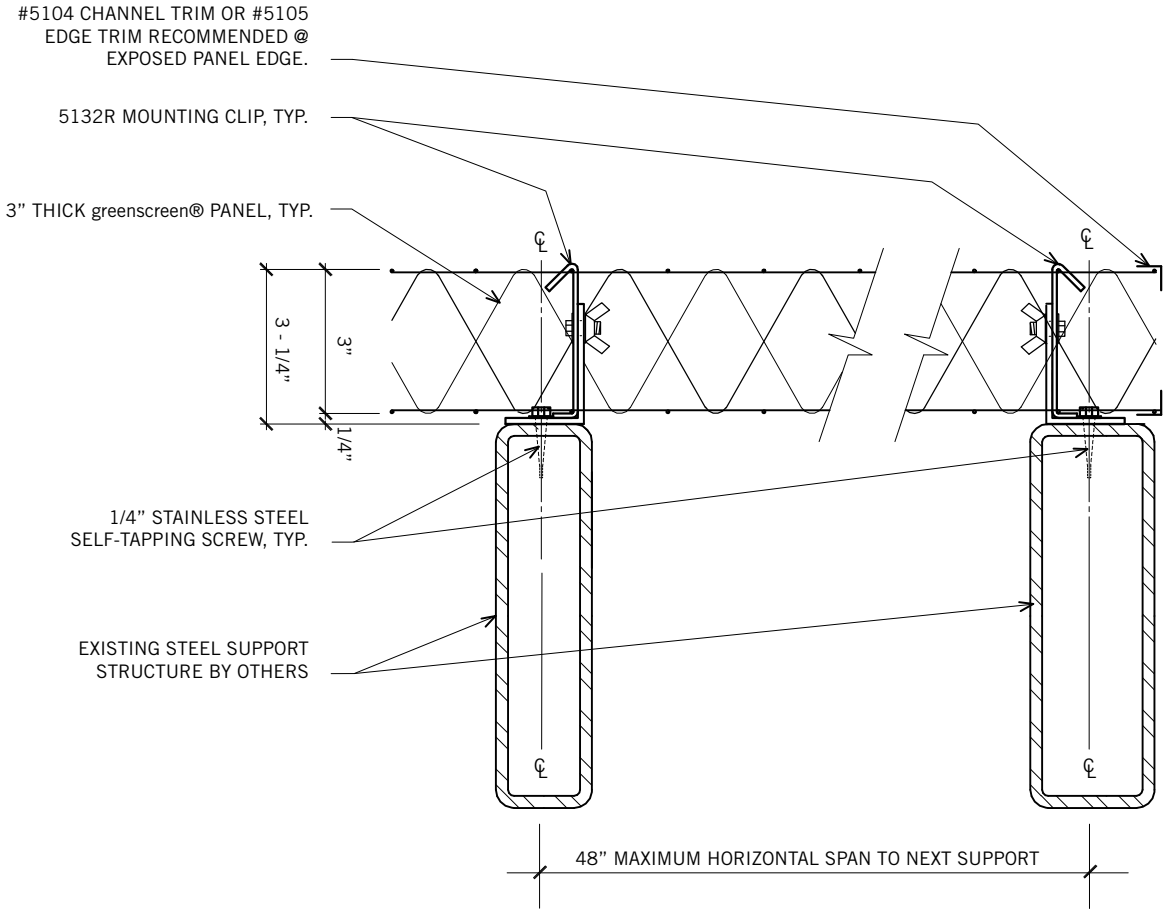

OVERHEAD PANEL - SURFACE MOUNT

*Used to mount panels on top of horizontal overhead structure for continuous plant coverage

greenscreen® 1743 S. La Cienega Blvd. Los Angeles CA 90035 T - 800.450.3494 www.greenscreen.com